25' Metal Crossarms, 12' spacing with spacers for 69 KV
36' Metal Crossarms, 17' 6" spacing with spacers for 161 KV

6A

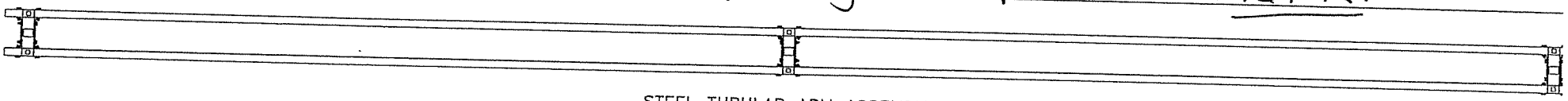

STEEL TUBULAR ARM ASSEMBLY

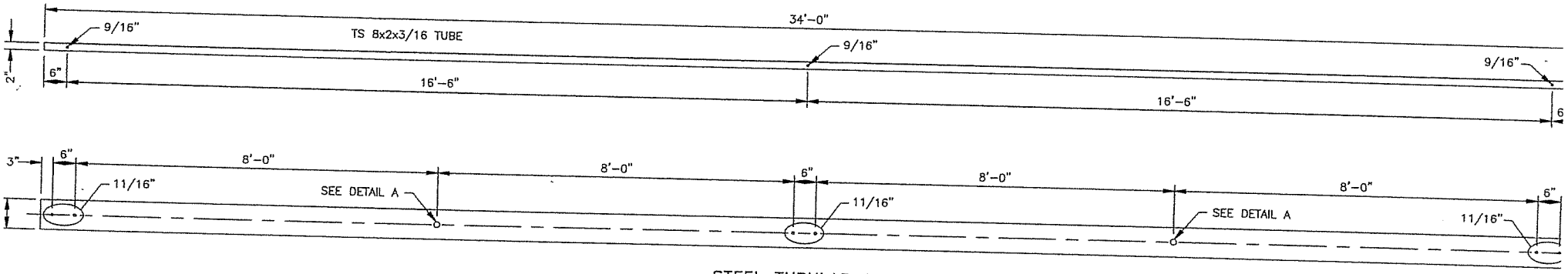

STEEL TUBULAR ARM
WELDED ARM

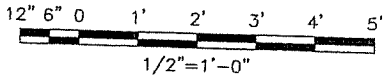

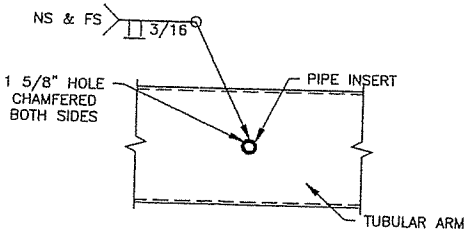

DETAIL A
SCALE: N.T.S.

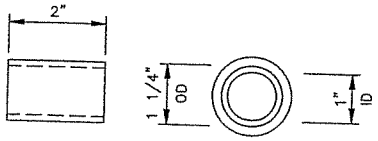
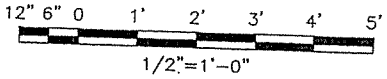
PIPE INSERT
SCALE: N.T.S.