34' Metal Crossarms, 16' 6" spacing with spacers for 161 KV

6A

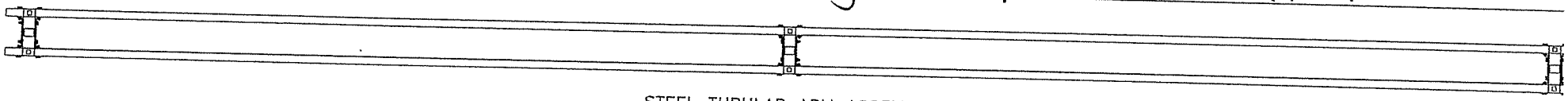

STEEL TUBULAR ARM ASSEMBLY

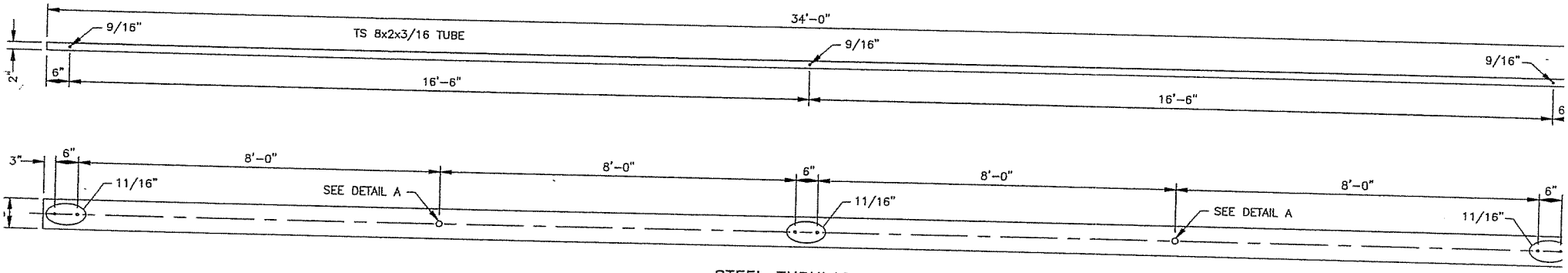

STEEL TUBULAR ARM
WELDED ARM

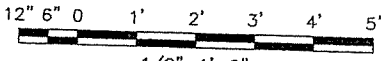

1/2"=1'-0"

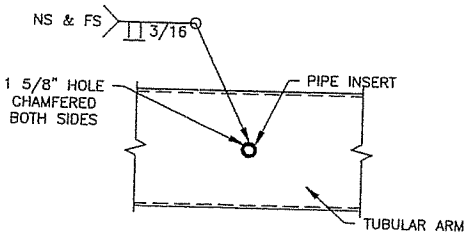

DETAIL A
SCALE: N.T.S.

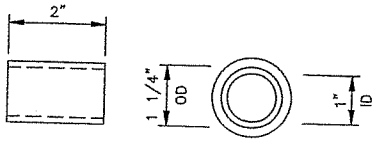

PIPE INSERT
SCALE: N.T.S.

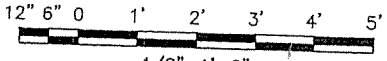

1/2"=1'-0"