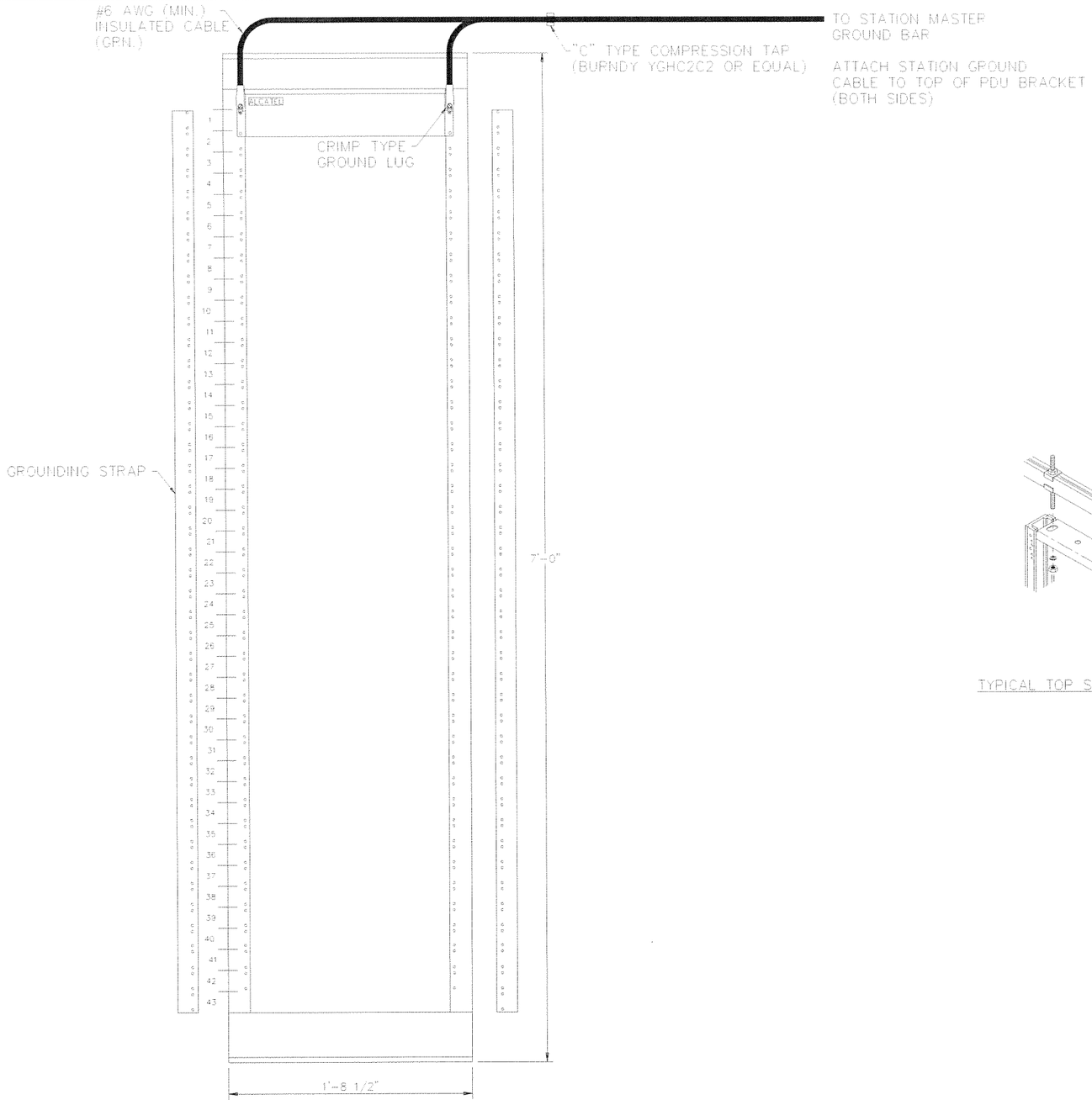

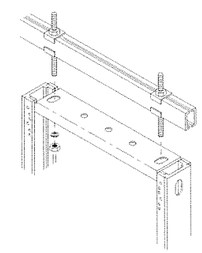

TYPICAL TOP SUPPORT BRACING

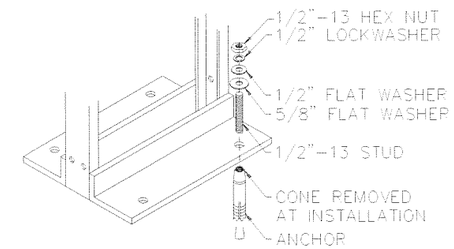

TYPICAL FLOOR MOUNTING

Reference Old drawing number:

REFERENCE DRAWINGS	NOTES	REV	DESCRIPTION	DRAWN	CHKD
	1. ALCATEL 7'-0" SEISMIC RACK. P/N 019-0429-010.				

UNITED STATES DEPARTMENT OF ENERGY
SOUTHWESTERN POWER ADMINISTRATION
TULSA, OKLAHOMA

SYSTEM DRAWINGS
MICROWAVE RADIO SYSTEM
ALCATEL SEISMIC RACK TYPICAL INSTALLATION

SCALE	N.T.S.	DRAWING NUMBER	SYS-C2001
DRAWN	DIK		
CHECKED	JEF		
SUBMITTED	JEF	FILE NAME C2001	SHEET NUMBER 1 OF 1
APPROVED			

Border name: A1ASL201 Size: 36 x 24
Last Edited: 04/29/04 10:05:38 Last File Name: Z:\System_Drawings\Southwestern\A27040_-_Terminal_Equipment_Documentation_-_Jerry_Ferguson\C2001_SYS.dwg
david kinyon

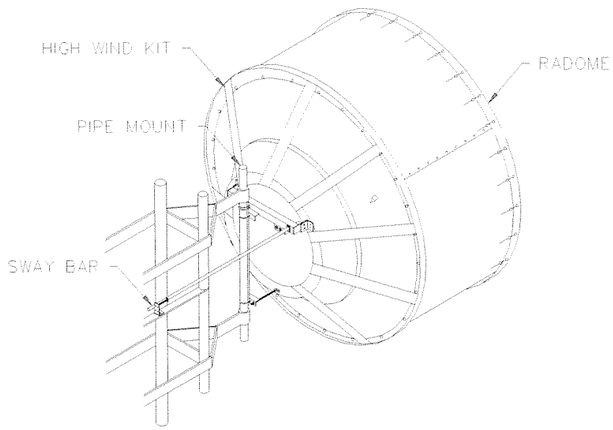

DETAIL "A"
TYPICAL MW ANTENNA INSTALLATION

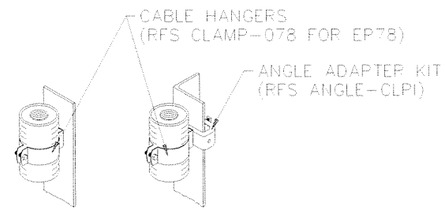

DETAIL "B"
TYPICAL CABLE HANGER INSTALLATIONS
SEE NOTE 1

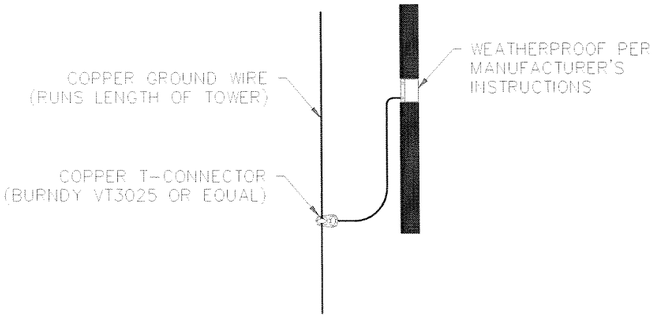

DETAIL "C"
WAVEGUIDE GROUNDING KIT
(RFS GKIT-60-078 FOR EP78)
SEE NOTES 2 & 3

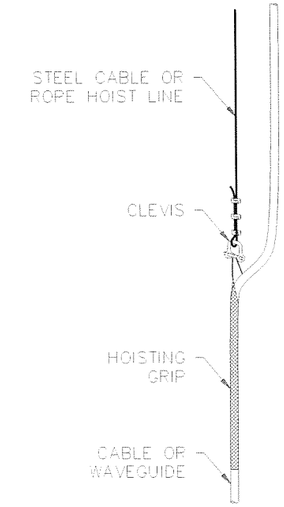

DETAIL "D"
2 LOOP HOISTING GRIP
(RFS HOIST2-L05)
SEE NOTE 4

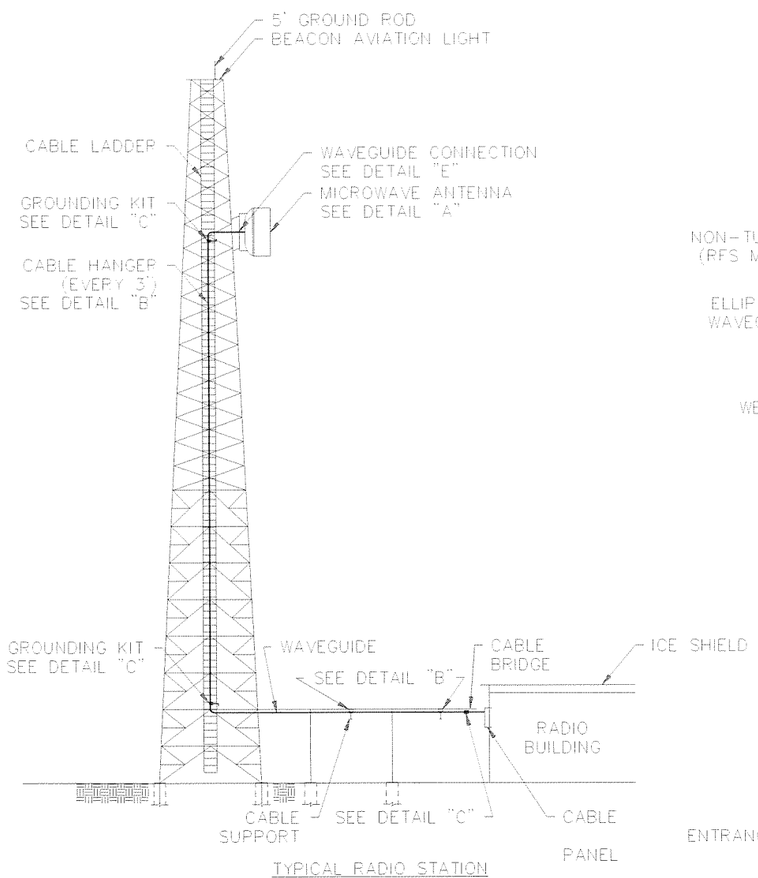

TYPICAL RADIO STATION

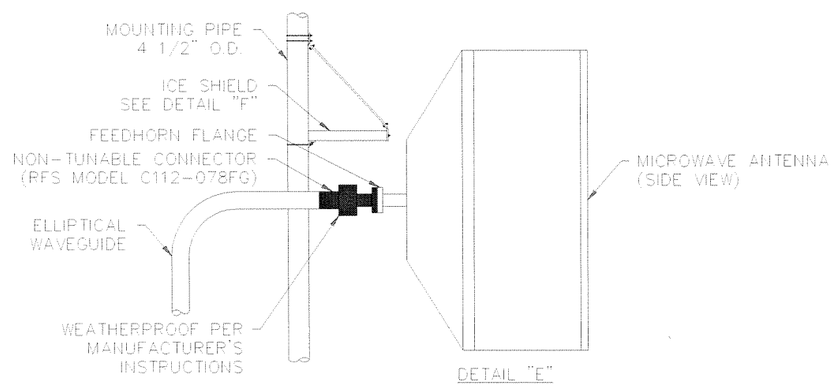

DETAIL "E"
WAVEGUIDE-ANTENNA CONNECTION

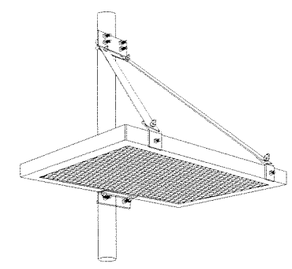

DETAIL "F"
ICE SHIELD DIAGRAM
SEE NOTE 5

NOTES:

1. CABLE HANGERS SHALL BE USED TO ATTACH THE WAVEGUIDE (OR COAX) TO THE TOWER AND CABLE BRIDGE EVERY 3 FEET (MIN.). HANGERS SHALL BE ATTACHED DIRECTLY TO EXISTING MOUNTING HOLES WHERE AVAILABLE; OTHERWISE ANGLE ADAPTERS SHALL BE USED.

2. WAVEGUIDE (OR COAX) SHALL BE GROUNDED AT THE FOLLOWING POINTS:
   a. TOP: 12 TO 18 INCHES BELOW THE BEND TO THE HORIZONTAL RUN TO THE ANTENNA CONNECTOR.
   b. BOTTOM: 12 TO 18 INCHES ABOVE THE BEND TO THE HORIZONTAL RUN UNDER THE CABLE BRIDGE.
   c. VERTICAL RUN: EVENLY SPACED EVERY 60-80 FT.
   d. JUST OUTSIDE THE BUILDING ENTRANCE.

3. GROUNDING KITS SHALL BE CONNECTED TO THE GROUND WIRE RUNNING THE LENGTH OF THE TOWER (NOT TO THE STRUCTURAL STEEL). ALL GROUND WIRE SHALL BE #6 AWG COPPER OR LARGER.

4. HOISTING GRIPS SPACED AT LEAST EVERY 100 FT. SHALL BE USED TO SUPPORT THE WAVEGUIDE (OR COAX) DURING INSTALLATION. HOISTING GRIPS SHALL REMAIN ON THE CABLE AFTER INSTALLATION AND SECURED TO THE TOWER AS ADDITIONAL SUPPORT FOR THE CABLE.

5. TYPICAL ICE SHIELD IS 18"x18". ALL PARTS SHALL BE HOT-DIP GALVANIZED

Reference Old drawing number:

REV	DESCRIPTION	DRAWN	CHKD

UNITED STATES DEPARTMENT OF ENERGY
SOUTHWESTERN POWER ADMINISTRATION
TULSA, OKLAHOMA

SYSTEM DRAWINGS
MICROWAVE RADIO SYSTEM
TYPICAL MICROWAVE ANTENNA SYSTEM INSTALLATION

SCALE	N.T.S.	DRAWING NUMBER	
DRAWN	CTK	SYS-C8701-1	
CHECKED	JEF		
SUBMITTED	JEF	FILE NAME	SHEET NUMBER
APPROVED		C8701-1	1 OF 2

Border name: A1ISO-201 Size: 36 x 24
Last Edited: 05/06/04 13:31:21 Last File Name: Z:\System_Drawings\Southwestern\A-27040_-_Terminal_Equipment_Documentation_-_Jerry_Ferguson\C8701-1_SYS.dwg
David Kenyon

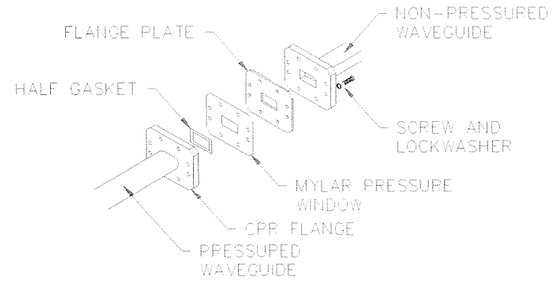

DETAIL "A"
PRESSURE WINDOW INSTALLATION

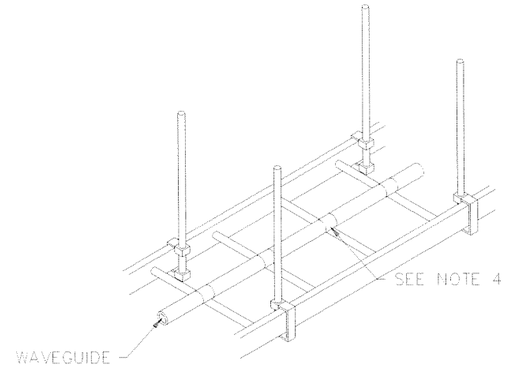

DETAIL "B"
LADDER RACK CABLE ATTACHMENT

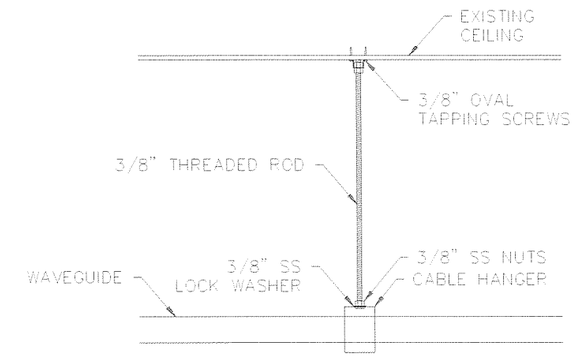

DETAIL "C"
CEILING ADAPTER KIT

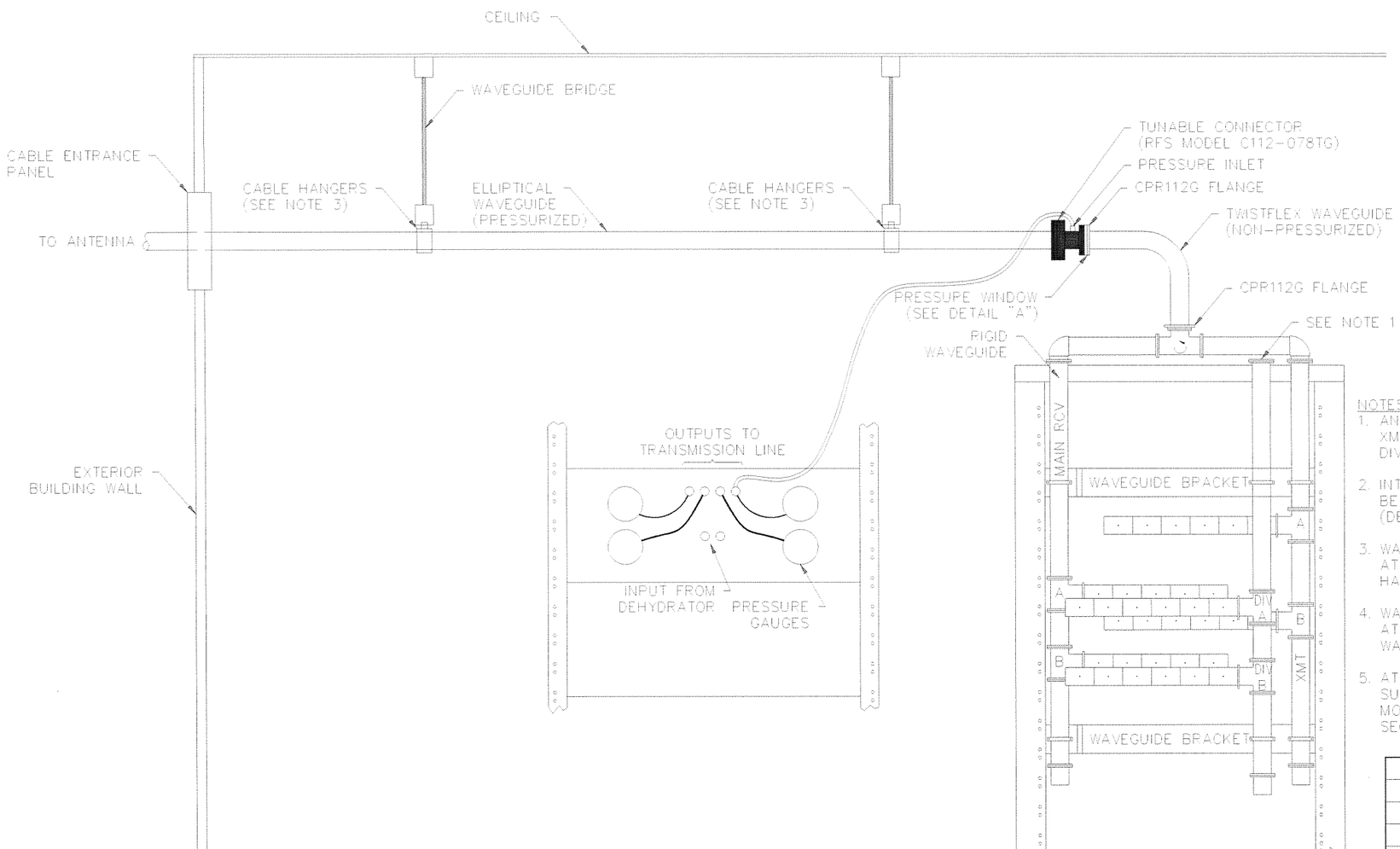

DISTRIBUTION MANIFOLD (TYPICAL)
REAR VIEW

MICROWAVE RADIO RACK (TYPICAL)
REAR VIEW

NOTES:

1. ANTENNA SYSTEM CONFIGURATION SHOWN FOR THE MAIN XMT/RCV ANTENNA SHALL ALSO BE USED FOR THE DIVERSITY ANTENNA.
2. INTERIOR CABLE SUPPORT STRUCTURES WILL TYPICALLY BE A WAVEGUIDE BRIDGE (SHOWN) OR LADDER RACK (DETAIL B).
3. WAVEGUIDE SHALL BE ROUTED ALONG AND SECURELY ATTACHED TO THE WAVEGUIDE BRIDGE USING CABLE HANGERS.
4. WAVEGUIDE SHALL BE ROUTED ALONG AND SECURELY ATTACHED TO THE CABLE LADDER RACK USING 9-PLY WAXED LACING TWINE (DETAIL B).
5. AT LOCATIONS THAT DO NOT HAVE EXISTING CABLE SUPPORT STRUCTURES, CEILING ADAPTER KITS (RFS MODEL CEIL12-51, OR EQUAL) SHALL BE USED TO SECURE THE WAVEGUIDE (DETAIL C).

Reference Old drawing number:

REV.	DESCRIPTION	DRAWN	CHKD

UNITED STATES DEPARTMENT OF ENERGY
SOUTHWESTERN POWER ADMINISTRATION
TULSA, OKLAHOMA

SYSTEM DRAWINGS
MICROWAVE RADIO SYSTEM
TYPICAL MICROWAVE ANTENNA SYSTEM INSTALLATION

SCALE	N.T.S.	DRAWING NUMBER	
DRAWN	DIK	SYS-08701-2	
CHECKED	JEF		
SUBMITTED	JEF	FILE NAME 08701-2	SHEET NUMBER 2 OF 2
APPROVED			

Borderless name: A1A2L201 Size: 36 x 24
Last Edited: 06/10/04 10:51:56 Last File Name: Z:\System_Drawings\Southwestern\A27041_-_Terminal_Equipment_Documentation_-_Jerry_Ferguson\C8701-2_SYS.dwg
dbaldwin